Asphalt Roller
RA12

Operator's Manual



THIRD COAST EQUIPMENT

THIRDCOASTEQUIPMENT.COM

©2024 by Third Coast Equipment, Inc. All rights reserved.

All trademarks referenced in this manual are the property of their respective owners.

No portion of this manual may be reproduced without written permission from Third Coast Equipment, Inc.

To reduce the risk of injury, all operators and maintenance personnel must read and understand their machine's instruction manual in full before operating, changing accessories, or performing maintenance on that machine.

CONTENTS

Introduction 1

Applications 1

Safety Labeling 2

Hazards & Risks 4
- California Proposition 65 Warning 4
- General Hazards & Risks 4
- Transportation Hazards 4
- Mechanical Hazards 5
- Fire, Explosion & Thermal Hazards 5
- Chemical Hazards 5
- Noise Hazards 6
- Personal Protective Equipment & Human Health Hazards 6
- Additional Hazards 6

Operation 7
- Familiarization with the Roller & its Components 7
- Emergency Stop Button 7
- Choke Lever 7
- Control Panel 7
- Throttle Lever 7
- Water Pump Control Panel 8
- Joystick Control 8
- Parking Brake 8
- Daily Pre-Operation Inspection 8
- Starting the Roller 9
- Operating the Roller 9
- Fore/Aft Travel 9
- Operating the Exciters 9
- Operating the Water Pump 9
- Powering Off the Roller 9
- Emergency Shutdown Procedure 9

Tips for Proper Compaction 10

Extended Storage 11

Lifting & Transportation 11

Care & Preventative Maintenance 12
- Machine Inspection Intervals 12
- Engine Inspection & Maintenance Tables 13
- Tightening Torque Tables 14
- Service Parts & Fluids Tables 14

Specifications 15
- Machine Specifications 15
- Engine Specifications 16

Troubleshooting 16

Wiring & Hydraulic Diagrams 18

Warranty 19

INTRODUCTION

Thank you for your purchase of this Third Coast Equipment, Inc. ("Third Coast") asphalt roller. Please read this operator's manual in its entirety prior to using your new machine. This manual provides information pertaining to the safe use, proper operation, and routine maintenance of this machine. All operators and maintenance personnel must read and understand this manual in full before operating, changing accessories, or performing maintenance on this machine.

This manual is written for Third Coast machines in production at the time of publication, and Third Coast reserves the right to change any portion of this manual at any time without notice to reflect any changes to current production machine configurations or updates to regulatory compliance or for any other reason deemed appropriate by Third Coast.

The latest revision of this manual can be obtained by visiting us online at:

THIRDCOASTEQUIPMENT.COM

APPLICATIONS

Compaction is an essential step in construction; proper ground preparation is critically important in setting a base for any structure, whether that structure be an asphalt road or a residential, commercial or industrial building, footing, pier; retaining wall, deck, or even a simple concrete sidewalk.

Any time earth is disturbed, whether through trenching, digging, excavation, or addition of gravel substrates, it must be compacted before building commences. Any time asphalt is laid on top of this compacted ground, it must be consolidated and smoothed.

Proper compaction ensures the ground is prepared to handle the weight of the structure above it by increasing the packing factor of ground solids, eliminating unnecessary air, and reducing compressibility. In asphalt construction, it also ensures the roadway will not have cracking, depressions, slippage, potholes, or ruts.

Asphalt rollers feature a dual-drum design that vibrates under high frequency to smooth and consolidate asphalt. An integrated adjustable spray bar prevents asphalt from adhering to the drums, and an articulated design helps navigate the toughest jobsites. Featuring significantly more weight and power than walk-behind compactors, asphalt rollers are the tool of choice for larger jobsites.

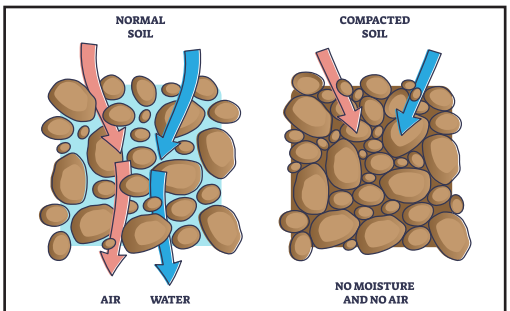

SUBSTRATE COMPACTION

Asphalt rollers are ideal for:

- Compacting granular & mixed soils
- Gravel/aggregate compaction
- Roadway preparation

SAFETY LABELING

HAZARD & NOTICE ICONOGRAPHY

Third Coast machines use International Standardization Organization (ISO) compliant iconographic labeling to depict and differentiate this machine's dangers, warnings, and cautions (collectively referred to as "hazards") as well as to provide non-hazard related notices.

NOTICE Indicates information not related to machine hazards, including tips for improved operation or maintenance.

CAUTION Indicates a hazard that **could** lead to minor or moderate injury if not avoided.

WARNING Indicates a hazard that **could** lead to serious injury or death if not avoided.

DANGER Indicates a hazard that **will** lead to serious injury or death if not avoided.

All possible hazardous situations cannot be covered in any operator's manual. Care must be exercised by everyone using, maintaining, or working on or near this equipment. If you are ever in doubt of how to safely operate or service this equipment, cease operation immediately and contact Third Coast or any Third Coast authorized dealer for assistance.

MACHINE LABEL LOCATIONS

The labels shown below and on the following pages are included on this Third Coast machine and must be maintained as part of the machine. Any label that becomes illegible through operation, wear & tear, or for any other reason must be replaced before the machine is operated, transported, or serviced. All labels must be understood by all operators prior to operating this equipment. Note, other labels are found on and near the engine of this machine and are explained in your engine manufacturer's operation manual.

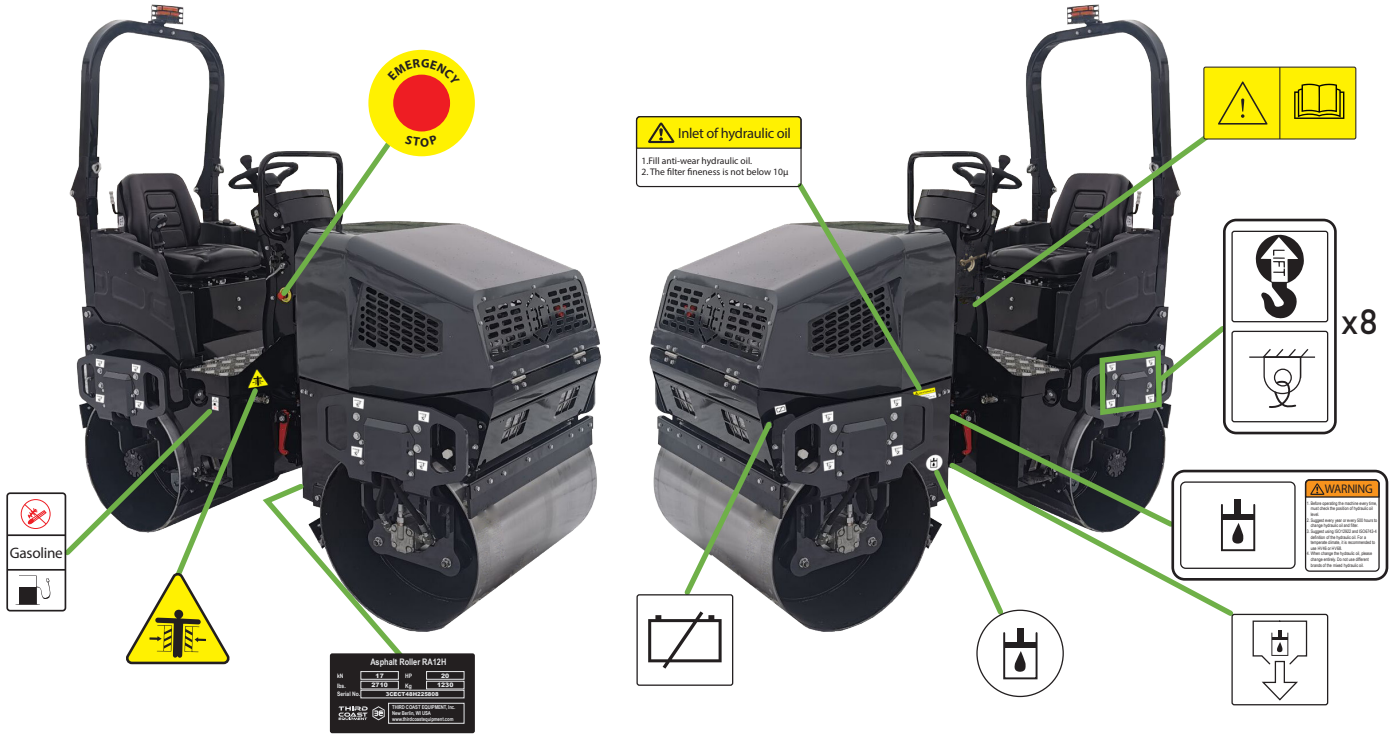

MACHINE LABELS

LABEL	INTERPRETATION
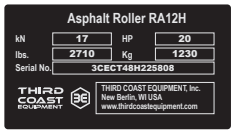	NAMEPLATE: This label lists important information about the machine including model, serial number, and other information.
	TIE DOWN: This label identifies safe tie-down points for securing the machine for transport.
	HYDRAULIC OIL: This label indicates the presence of hydraulic oil.
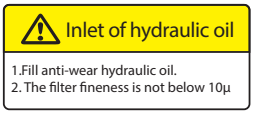	HYDRAULIC OIL INLET: This label contains information about filling the hydraulic oil tank.
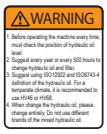	HYDRAULICS WARNING: This label warns of the need to inspect and maintain the hydraulic fluid type, level, and condition.
	LIFT POINT: This label identifies the safe lifting point for transporting the machine.
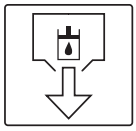	HYDRAULIC OIL DRAIN: This label identifies the drain port for emptying hydraulic oil.
	GASOLINE HAZARDS: This label warns of the presence of gasoline fuel and the hazard an open flame presents.
	PINCH POINT: This label warns of a pinching hazard present at the articulation joint.
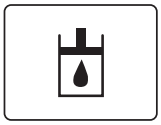	HYDRAULIC FLUID LEVEL: This label indicates where to read the hydraulic fluid level.
	EMERGENCY STOP: This label indicates the location of the emergency stop button.

Labels continued on next page.

LABEL	INTERPRETATION
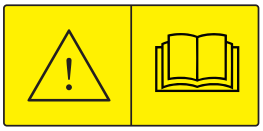	READ THE MANUAL: This label instructs the operator to read the manual prior to operating the machine.
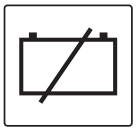	BATTERY DISCONNECT: This label indicates the location of the battery disconnect switch.

HAZARDS & RISKS

CALIFORNIA PROPOSITION 65 WARNING

WARNING Use of this product may expose you to certain chemicals, including engine exhaust, which are known to the State of California to cause cancer.

GENERAL HAZARDS & RISKS

WARNING General hazards are those that do not fall under a specific hazard classification, or that relate to multiple hazard classifications.

- Ensure all operators read and understand the operator's manual prior to using this machine.
- Never operate or allow anyone else to operate this machine without understanding the operational and safety controls of this machine. Even after reading the manual, new operators should receive instruction from an experienced operator.
- Never leave a machine operating while unattended.
- Use only accessories recommended by Third Coast. Any non-approved accessories may lead to operator injury or machine damage.
- Inspect this machine before every operation and at the required intervals listed in the "Care & Preventative Maintenance" section.
- Clean the machine during and after each use to ensure all safety labels remain legible. Replace any illegible safety labels before continued operation.
- Serious injury can result from improper or careless use of this machine.
- Keep this machine out of the reach of children at all times, including when not in use.

TRANSPORTATION HAZARDS

WARNING Failure to adequately secure this machine while transporting and failure to lift with proper technique can result in damage to the equipment or injury or death.

- Inspect all lifting hardware (both on this machine and all ancillary lifting equipment) prior to lifting this machine.
- Never lift this machine while it is operating.
- Ensure the fuel cap is tight prior to lifting or transporting this machine.
- Only lift this machine with proper load-rated straps or slings rated for the weight and application.
- Never stand or work under a lifted machine.
- This machine is heavy. Lift using auxiliary equipment only. Do not attempt to lift this machine manually.
- Ensure a clear path to your destination and stable and clear ground before lifting.

MECHANICAL HAZARDS

⚠ WARNING Certain mechanical hazards are inherit in operating this machine due to the weight, operation, travel, and vibration of this machine. Disregarding these warnings can lead to serious injury.

- Do not operate this machine unless all protective guards are in place.
- Keep hands and feet clear of rotating and moving parts.
- Ensure the machine is OFF before removing the guards or making adjustments or repairs.
- Ensure the machine and the operator are set up on stable ground while in operation or service.
- Do not leave this machine unattended while in operation.
- When working in/near trenches, ensure adequate trench shoring is used to prevent collapse.
- Ensure the area in which you are working does not contain any live electrical cables, gas, water, or communication services that may be damaged by this equipment.
- Never stand on the unit while it is operating.
- Do not increase the governed no-load motor speed above 3,200 rpm; personal injury and damage to the machine may result.
- All machine and engine repairs should be conducted by a certified servicing dealership.

FIRE, EXPLOSION & THERMAL HAZARDS

⚠ WARNING Internal combustion engines contain gasoline and generate heat that poses certain hazards.

- Gasoline is extremely flammable and explosive under certain conditions.
- Ensure fuel is only stored in an approved storage container.
- Do not refuel while the engine is operating or hot.
- Do not refuel in the vicinity of sparks or open flame.
- Do not refuel in confined spaces. Vapors may concentrate and ignite.
- Only fuel this machine on the ground. Do not fuel in truck beds or other areas where static electricity may be present.
- Do not overfill the fuel tank.
- Ensure the fuel cap is securely fitted after refueling.
- Avoid spilling gasoline when refilling; spilled gasoline or gasoline vapors may ignite. If spillage occurs, clean the area per local environmental regulations prior to resuming operation.
- Avoid contact with the engine and muffler while this machine is running or while it is hot. Extreme heat may cause severe burns.
- Do not operate this product in enclosed spaces or modify it in any way that reduces engine cooling. Never attempt to restrict airflow over the engine cooling fins.
- Do not operate this machine off of diesel fuel; use only gasoline with minimum 87 octane rating.

CHEMICAL HAZARDS

⚠ WARNING Certain chemical hazards exist due to the presence of gasoline, grease, oil, and other chemicals presented by the combustion process including carbon monoxide, a colorless, odorless gas that can cause death if inhaled. Failure to follow the below instructions may lead to severe injury or death.

- Do not operate in a confined space or without adequate ventilation. Carbon monoxide exhaust gases from internal combustion engine driven equipment can cause death in confined spaces.

- Do not refuel this machine in confined spaces. Gasoline vapors may be hazardous to your health, and concentrated vapors may cause an explosive atmosphere.
- Any fluids spilled from the machine, whether flammable or not, must be cleaned up in a manner consistent with all local environmental regulations.
- Always use approved fluids when maintaining or servicing this machine. Improper fluids may lead to poor performance or failures of the machine and may create a hazardous situation for the operator or bystanders. Dispose of all fluids properly in accordance with local regulations.

NOISE HAZARDS

⚠ WARNING This equipment exceeds the Occupational Safety & Health Administration ("OSHA") safe noise levels and can cause temporary or permanent hearing loss.

- Wear an approved hearing protection device while operating this machine as required by OSHA regulations to limit noise exposure.
- Bystanders may also require hearing protection, depending on their distance to the machine.
- Always be visually aware of your surroundings. While operating this machine, you may not hear other auditory warnings from nearby equipment. Heightened awareness is required.

PERSONAL PROTECTIVE EQUIPMENT & HUMAN HEALTH HAZARDS

⚠ WARNING Proper personal protective equipment and operating practices are important to minimize the inherent hazards that this machine presents.

- Always wear proper protective clothing when operating this equipment, including hearing protection, respiratory protection, shatterproof eye protection, safety-toe boots, and other personal protective equipment ("PPE") as required by OSHA or local regulations.
- Control silica dust at the source when possible using water or other suppression means.
- Exercise care when operating this unit. Exposure to vibration or repetitive work actions may be harmful to the hands and arms.
- Slip/trip/fall hazards are a major cause of serious injury and death. Beware of uneven or slippery work surfaces.
- Exercise care when working in the vicinity of open trenches, holes, or excavations.
- Never operate this equipment under the influence of drugs or alcohol. This includes prescription drugs without your doctor's consent.
- Never operate this equipment when you are not feeling well.

ADDITIONAL HAZARDS

⚠ WARNING It is not possible to document all of the scenarios that could result from misuse of this machine, and proper training, operation, and jobsite safety best practices should always be followed to minimize the occurrence and severity of all hazards.

- Only use this machine for its intended application.
- Always have an emergency preparedness plan, and practice it often.
- Always have a first aid kit and fire extinguisher on the jobsite. Ensure the fire extinguisher is rated for the applications, including fires caused by the combustion of gasoline and diesel.
- Do not work alone; always ensure someone else is on the jobsite with you.
- Know your jobsite address so you can give it to first responders in an emergency.

FAMILIARIZATION WITH THE ROLLER & ITS COMPONENTS

Prior to operating this roller, it is important to be aware of the critical components, safety features, and safe operating procedure of this machine.

EMERGENCY STOP BUTTON



The Emergency Stop button is located on the operator's right side of the steering column and is indicated by the label shown to the right. Engaging the Emergency Stop button ceases all machine functions including the engine, and should only be used in emergency situations. To engage the Emergency Stop button, depress it. To release it, twist it clockwise until it pops outward.

CHOKE LEVER

The choke lever is located on the left side of the steering column and is used during a cold startup to balance the air/fuel mixture such that the engine can start correctly. To apply choke to the engine during startup, position the lever upwards to the full choke position (CHOKE ON). As the engine warms up, gradually slide the choke lever downwards to the no-choke position (CHOKE OFF) for normal operation.

CHOKE ON

CHOKE OFF

CONTROL PANEL

The control panel provides important operator feedback including engine conditions, machine status, and other critical metrics, as detailed below:

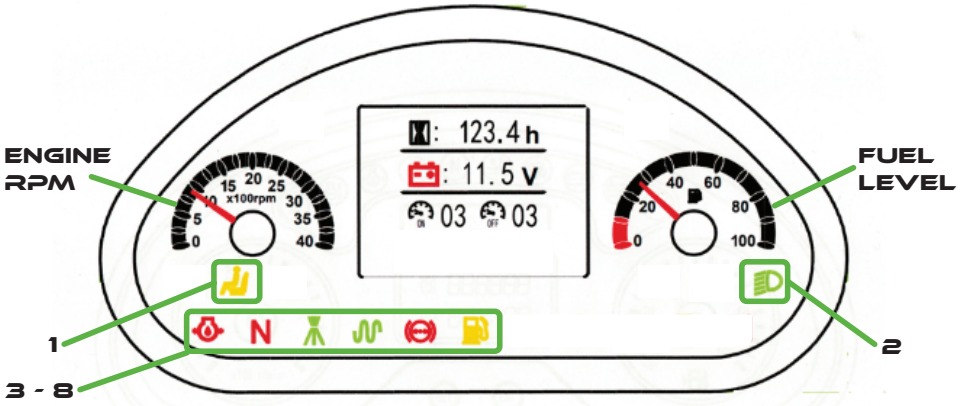

1. SEAT SWITCH
2. LIGHTS ON
3. LOW OIL PRESSURE
4. NEUTRAL POSITION
5. WATER PUMP ON
6. VIBRATION ON
7. BRAKES ENGAGED
8. LOW FUEL ALERT

THROTTLE LEVER

The throttle lever, located just under the key start, adjusts engine speed. This roller should be started and operated with the throttle in the maximum speed position, achieved by positioning the throttle upwards towards the icon. Minimum speed is achieved by positioning the throttle downwards towards the icon, and is only used in special circumstances such as troubleshooting. In normal operation, the machine should always run wide-open throttle.

WATER PUMP CONTROL

This roller has an adjustable water pump control that can vary the flow rate of water to the spray bar, allowing precise control of how much water is applied to the surface of the asphalt when the water delivery is enabled. To make adjustments to the water pump timing, rotate the water pump control knob on the on the left-hand side of the steering column until the desired setting is achieved. MAX is the highest rate of flow and equates to a constant flow of water. MIN is the lowest rate of flow and equates three seconds on and eight seconds off.

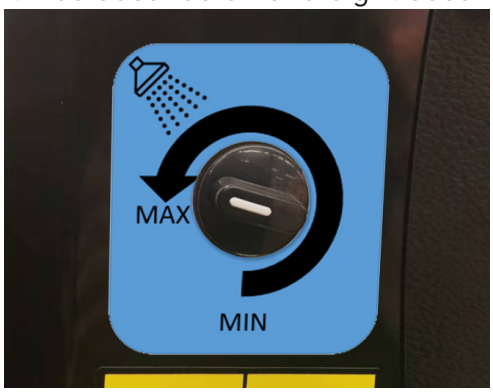

WATER PUMP CONTROL PANEL

JOYSTICK CONTROL

The joystick controls fore/aft travel, engages/disengages the exciters, and engages/disengages the water spray pump. Unless actively moving the roller forward or backwards, the joystick should remain in the neutral position, indicated by an “N”. Pushing the joystick forward from neutral will make the roller travel progressively faster in the forward direction, and pulling the joystick rearwards from the neutral position will make the roller travel progressively faster in the rearwards direction.



Either of the two GREEN buttons on the joystick are used to toggle the water pump on and off, and either of the two red buttons on the joystick are used to toggle the exciters on and off.

PARKING BRAKE

The parking brake is activated by a hand lever on the operator’s left side. Pull the handle to engage the parking brake. Release the handle to remove the parking brake. If the parking brake is engaged, an alarm will sound when attempting to move the machine forwards or backwards. The parking brake can be adjusted manually by tightening the knob at the top of the parking brake lever. Proper tension should be checked periodically to ensure proper brake engagement.

DAILY PRE-OPERATION INSPECTION

The following inspections must be completed prior to each daily use of the roller and again after every four hours of machine operation:

- Visually inspect the machine for signs of damage. Remove any dirt, debris, or material that may have accumulated from prior use.
- Check all hardware to ensure proper tightness. See the “Care & Preventive Maintenance” section for proper fastener torque.

- Check the engine oil level and hydraulic oil level, and refill as needed.
- Check for fuel and hydraulic oil leaks, and repair as needed.

STARTING THE ROLLER

- Ensure the area around the roller is free from personnel, debris, and other potential hazards prior to mounting the roller.
- Ensure the engine speed is in the  position, the Emergency Stop is disengaged, the joystick is in the NEUTRAL "N" position, and the parking brake is applied prior to starting the engine.
- Adjust the choke to the appropriate position based on a cold or warm starting condition.
- Sit in the operator's seat and fasten the seat belt before starting the roller.
- Turn the key to the START position and hold it until the engine starts, then release the key.
- Allow 2-3 minutes for the roller to warm up. If you started with the choke applied, slowly adjust the choke lever to the OFF position. When ready, release the parking brake. Your roller is now ready to operate.

OPERATING THE ROLLER

FORE/AFT TRAVEL

Basic fore/aft motion of the roller is controlled by the joystick at the operator's right arm position. The control is position-sensitive and will travel faster in either direction the further away the lever is from the "N" neutral position. To travel forwards, push the joystick first to the left to disengage it from its neutral position, then towards the front of the machine. To travel in reverse, push the joystick first to the left to disengage it from its neutral position, then towards the rear of the machine. NOTE: If the parking brake is engaged, an audible alarm will sound when attempting to move the roller forwards or backwards.

OPERATING THE EXCITERS

To engage the compaction exciters, press either of the RED buttons on the joystick control. To disengage the compaction exciters, press either of the RED buttons on the joystick again.

OPERATING THE WATER PUMP

To engage the water pump, press either of the GREEN buttons on the joystick control. To disengage the water pump, press either of the GREEN buttons on the joystick again.

POWERING OFF THE ROLLER

To power off the roller after use:

- Disengage the vibration, turn off the lights, and engage the parking brake to prevent roll-away.
- Shut off the engine by turning the key to the OFF position.

EMERGENCY SHUTDOWN PROCEDURE

The machine is equipped with an Emergency Stop button that will stop all machine functions immediately when engaged, including shutting down the engine. To engage the Emergency Stop, depress the Emergency Stop button  fully. To release the Emergency Stop, turn the Emergency Stop button clockwise until it stops and pops slightly outward. The Emergency Stop is for emergencies only and should not be used for shutting down the roller in non-emergency situations.

TIPS FOR PROPER COMPACTION

Asphalt rollers are fast, efficient tools for compacting road and driveway substrates and smoothing asphalt. The chief concern when operating a roller is safety, and several precautions should be followed during operation.

First, walk the jobsite prior to starting your equipment to make sure it is free of people, foreign objects, obstructions, trip hazards, and other obstacles that may impede operation or cause a safety concern. The operator is always responsible for safe operation and ensuring there are no people or objects in the roller's path.

Proper compaction is extremely important, as it eliminates extraneous air in the substrate and reduces the transport of air and water, resulting in a more stable base with less chance of shifting or settling. A properly compacted base always leads to a stronger, more stable asphalt top coat. However, this asphalt roller is a high-powered device, and it is possible to overdo it and cause an over-compacted substrate, which is actually weaker and can yield long-term failures. Your best resource regarding proper jobsite compaction is always your jobsite engineer. If you have a jobsite engineer, always follow their specification for proper compaction.

If you do not have a jobsite engineer, you can ensure the best possible compaction with these helpful rules of thumb:

- Don't overdo it. Cracking soil or pulverized substrates indicates over-compaction. Over-compaction can break down the soil itself, resulting in a much weaker substrate than properly compacted soil. Over-compaction of substartes like gravel can inhibit drainage instead of promoting drainage.
- As you gain experience with this machine, you will understand the noises it emits and how they relate to under-compaction, proper compaction, and over-compaction. The guidance of a more experienced operator can help you build this experience, but, in general, over-compaction will be noisy with excessive and more erratic machine vibration. Such motion can also cause premature wear to your roller.
- Count your passes in each area, and track your areas closely. Uniform compaction is equally as important as the right amount of compaction and helps prevent uneven settling.
- If in doubt of your lift requirements, a good rule of thumb is 3 inches for asphalt and up to 6 inches for granular (sand and gravel) soil.
- Water can be used on the substrate to minimize dust and should always be used on asphalt to minimize the chance that asphalt will stick to the drum. Program this roller's water pump timing to suit your local conditions to simplify this process.

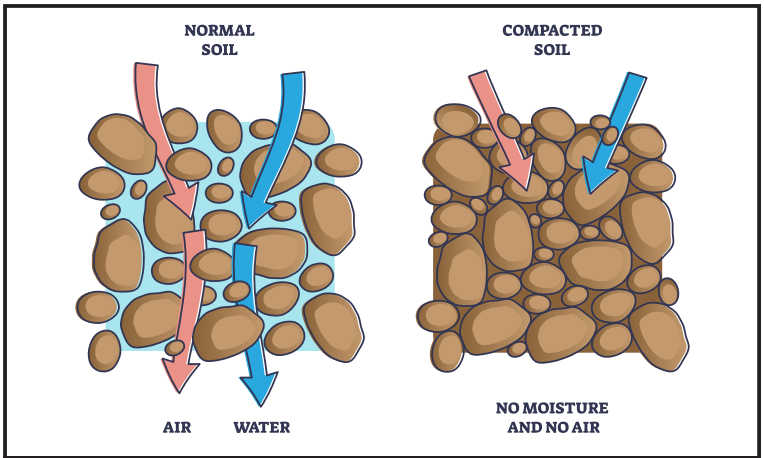

SUBSTRATE COMPACTION

EXTENDED STORAGE

Following proper long-term storage procedures ensures the machine is ready to operate when you return to it. The following procedures should always be performed when the machine will not be in use for the next 30 days:

- Thoroughly clean the exterior of the machine with a damp rag, then dry it. Do not use solvents.
- Check and repair any leaks and tighten any loose hardware prior to storage.
- Check the engine oil and hydraulic oil levels, and top off if necessary.
- Drain all fuel from the fuel tank, then operate the roller until the fuel in the fuel lines is consumed.
- Store the machine in a clean and dry indoor storage location.

LIFTING & TRANSPORTATION

Safe lifting practices must always be followed when moving this roller over long distances to and from the jobsite and when moving it short distances around the jobsite.

PRIOR TO LIFTING YOUR MACHINE:

- Power down the machine.
- Ensure all hardware, including the fuel cap, is secure on the machine. Tighten any loose bolts.

TO LIFT THIS MACHINE:

- Use a four-point lift strap or hook rated for the weight.
- Attach the lift strap through the indicated lifting points. There are eight in total, and one from each corner of the machine should be used. The lifting straps should always be connected symmetrically.
- Lift straight upwards, never at an angle, and never lift higher than necessary.
- Never walk underneath the machine when lifted.

TO TRANSPORT THIS MACHINE:

- When transporting over the road, always tie down the machine using straps of adequate strength secured through the front and rear tie-downs and engage the articulation lock.
- Always use multiple straps to secure this machine.
- When transporting across the jobsite using the roller's own power, always use smooth, controlled movements, a speed appropriate to the terrain, and position the roller straight up hills; avoid cross-slope climbs to reduce the risk of tipover.

NOTE: The lift point and tie downs on this machine are symmetrical about the centerline in the image shown on the right and should always be rigged symmetrically.



LIFTING & TIE-DOWN POINTS

CARE & PREVENTATIVE MAINTENANCE

Third Coast rollers are designed to provide years of trouble-free service, but as with all power equipment, periodic maintenance is required to keep this machine running smoothly. Maintenance is a normal part of ownership of any machine and must be carried out on time per the prescribed intervals or sooner, as needed. Please note, this operator's manual is not a service guide. All service should be done by a qualified, trained service technician.

⚠ CAUTION Inspection and other service should always be carried out on hard, level ground with the engine shut down.

MACHINE INSPECTION INTERVALS

This roller must be inspected, at a minimum, at the lowest interval described in the "Machine Maintenance/Inspection" table below. In tough operating environments, more frequent inspection is recommended.

MACHINE MAINTENANCE/INSPECTION	
ITEM	OPERATION HOURS
Basic operation check	Every 8 hours or every day
Full visual inspection	Every 8 hours or every day
Check hydraulic oil level	Every 8 hours or every day
Check scraper bars for wear	Every 8 hours or every day
Grease articulation joint	Every 100 hours or monthly
Change hydraulic oil filter	Every 600 hours
Clean battery terminals	Every 600 hours
Change hydraulic oil	Every 1,200 hours

DAILY OPERATIONAL CHECKS

Prior to each daily use of the equipment and at the start of each operator's shift:

- Visually inspect the machine for signs of damage. Remove any dirt, debris, or material that may have accumulated from prior use.
- Clear any dust accumulation from the air filter, engine cooling fins, articulation joint, and in the control panel.
- Check all hardware to ensure proper tightness. See the "Tightening Torque Tables" section for proper fastener torque.
- Check the engine oil level and hydraulic oil level, and refill as needed.
- Check for fuel and oil leaks, and repair as needed.
- Check scraper bars for wear. The scraper bars are spring loaded and self-adjusting; no maintenance is needed, but they should be replaced when worn.

MONTHLY OPERATIONAL CHECKS

After each month of operation, or each 100 hours, whichever occurs first:

- Grease the articulation joint (both top and bottom pins) with NLGI No. 2 synthetic multipurpose grease.

LONG-TERM OPERATIONAL CHECKS

- Change the hydraulic oil filter and clean the battery terminals every 600 hours.
- Change the hydraulic oil every 1,200 hours.

ENGINE INSPECTION & MAINTENANCE TABLES

To maximize the lifespan of your engine, inspect and maintain it per the schedule in the "Engine Maintenance" table below. This table is an excerpt from the engine manufacturer's manual and is not a substitute for reading your engine manual in its entirety.

ENGINE MAINTENANCE	
ITEM	OPERATION HOURS
Inspect for oil leakage	Every 8 hours or every day
Check oil level	Every 8 hours or every day
Check for loose or missing hardware	Every 8 hours or every day
Replace engine oil	First change: 20 hours Thereafter: Every 100 hours
Clean or replace air filter	Every 50 hours
Replace engine oil filter	Every 200 hours
Check and clean spark plug	Every 100 hours
Replace fuel filters	Every 300 hours
Check and adjust valve clearance.	Every 300 hours

A complete list of required engine maintenance tasks can be found in your engine manual.

TIGHTENING TORQUE TABLES

The threaded fasteners on this machine are all right handed, coarse-thread, metric, Class 8.8 or Class 12.9 fasteners.

All fasteners on this machine are marked by strength class and must be torqued to the proper specification for that class. To identify whether a fastener is a Class 8.8 or Class 12.9 fastener, check the identifying marks stamped on the head.



CLASS 8.8 FASTENER



CLASS 12.9 FASTENER

TIGHTENING TORQUE FOR CLASS 8.8 FASTENERS								
THREAD SIZE>	M6	M8	M10	M12	M14	M16	M18	M20
TORQUE, FT·LB>	7	17	34	59	94	146	210	292
TORQUE, N·M>	9.5	23	49	80	127	198	285	395

TIGHTENING TORQUE FOR CLASS 12.9 FASTENERS								
THREAD SIZE>	M6	M8	M10	M12	M14	M16	M18	M20
TORQUE, FT·LB>	11	26	51	88	139	210	285	401
TORQUE, N·M>	15	35	69	119	188	285	386	544

SERVICE PARTS & FLUIDS TABLES

SERVICE PARTS & FLUIDS		
ITEM	PART/TYPE	QUANTITY
Exciter Oil	Mobil SHC 629	0.58 qt (0.55L)
Articulation Joint Grease	NLGI #2 Synthetic	-
Engine Oil	10W-30	2.1 qt (2.0L)
Hydraulic Oil	AW ISO 46 Hydraulic Oil	9.8 US Gal (37L)
Hydraulic Oil Filter	Donaldson P551551	1
Engine Air Filter	Honda 17210-Z6L-010	1
Engine Oil Filter	Honda 15400-PFB-014	1

MACHINE SPECIFICATIONS

TABLE 5: ROLLER SPECIFICATIONS	
DIMENSIONS & WEIGHT	
Wheelbase (“A”)	53.2 in
Overall Length (“B”)	79.3 in
Drum Diameter (“C”)	24.4 in
Drum Width (“D”)	35.4 in
Drum Thickness	0.43 in
Overall Width (“E”)	40 in
Height, ROPS Folded (“H1”)	64.6 in
Height, ROPS Extended (“H2”)	94 in
Operating Weight	2,711 lb
PERFORMANCE DATA	
Vibration Frequency, vpm	3,900
Centrifugal Force	3,821 lbf (17kN)
Travel Speed (with vibration), mph	5.0
Gradeability Maximum	30%
Inside turning radius, ft	7.5
Water Tank Capacity, US gal	32

Note: Roller and engine specifications are both subject to change at any time.

DIMENSIONS REFERENCE DIAGRAMS

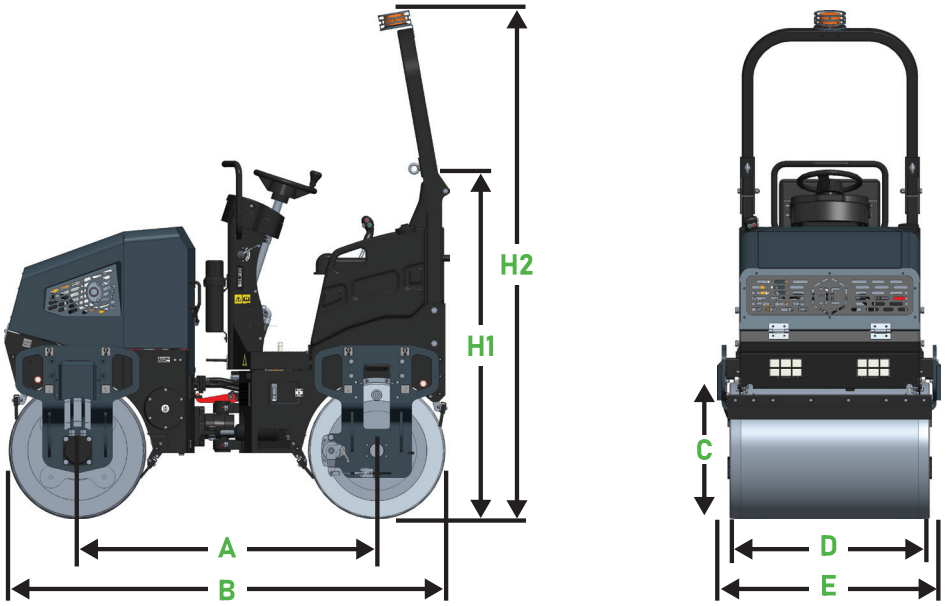

ENGINE SPECIFICATIONS

This machine features a Honda GX630 air-cooled gasoline engine. Full engine specifications can be found in your Honda engine manual, but key specifications are summarized below:

TABLE 6: ENGINE SPECIFICATIONS	
ENGINE DATA	
Engine Manufacturer	Honda
Engine Model #	GX630
Fuel Type	Gasoline
Cooling	Air Cooled
Type	Four Stroke
Number of Cylinders	2
Displacement, cu. in.	37.5
Peak Output Power, hp	20.8
Operating Speed, rpm	3,200
Air Cleaner Type	Dual Element
Fuel Tank Capacity, gal	7.4
Fuel Consumption, gal/hr	1.2

TROUBLESHOOTING

SYMPTOM	POSSIBLE CAUSE	SOLUTION
Engine does not start and will not turn over.	Battery disconnected.	Turn battery disconnect (green knob on negative terminal of battery) fully in the clockwise direction to connect battery.
	Operator is not in the seat.	Ensure operator is in the seat before starting, and that operator presence light on dash is not illuminated.
	Battery not charged or defective.	Check for 12V - 12.5V using a voltmeter, when the key is in the ON position. Charge or replace battery if voltage low.
	Emergency Stop is engaged.	Disengage Emergency Stop by twisting it counterclockwise.
	Loose battery wires.	Check that both red and black main battery wires are tightly connected to the battery.
	Loose wire connection at starter.	Check that the large red wire is connected tightly at the starter terminal.
	Joystick not in neutral position.	Move to neutral position and retry.

SYMPTOM	POSSIBLE CAUSE	SOLUTION
Engine does not start; it turns over but will not maintain operation.	Engine too cold for no-choke start.	Engage choke fully, and try again. Choke has two detents for partial choke, make sure it is fully engaged in UP position.
	Low fuel level or bad fuel.	Check fuel level and age of fuel, and replace if necessary.
	Plugged fuel filter.	Check the fuel filter (located inline just before the carburetor).
	Plugged carburetor.	Remove carburetor and clean or replace per engine manufacturer's directions.
	Summer blend fuel in low temperature.	Fuel purchased in summer does not evaporate at temperatures below 40F. Replace fuel with winter blend fuel.
Engine is difficult to start, or will not remain running at idle.	Low fuel level or bad fuel.	Check fuel level and age of fuel.
	Winter blend fuel in high temperature.	Fuel purchased in winter is more likely to vapor lock at warm temperatures. Replace the fuel with summer blend fuel.
	Plugged or partially plugged fuel filters.	Inspect fuel filters, and replace if necessary.
	Engine is very cold.	Operate longer with choke in on position and remove choke gradually.
Engine shuts off after being operated for a long period of time.	Low fuel level or bad fuel.	Check fuel level and age of fuel, and replace if necessary.
	Plugged fuel filters.	Check the fuel filter (located inline just before the carburetor).
	Oil level too low. Low oil cut off engaged.	Check oil level, and refill if necessary.
	Plugged air filter.	Check air filter for dirt. Replace if necessary.
	No operator in seat or defective seat switch.	Operator must remain in seat for engine to stay running. A green light under the floor panel on the seat relay indicates the relay is working properly.
Engine runs but machine is low on power.	Low hydraulic oil level.	Check hydraulic oil level with sight glass on tank. Refill if necessary with ISO 46 oil.
	Operating with choke in "ON" position.	Check choke is in OFF position. Check choke cable for stretch and tighten as needed.
	Low engine RPM.	Operate at full throttle only - 3,200 rpm.
	Fouled spark plug.	If spark plug is black and/or sooty, replace it.
	Air Filter excessively dirty.	Clean or replace air filter.
	Plugged fuel filter.	Check the fuel filter (located inline just before the carburetor).
	Carburetor is blocked or plugged.	Remove and clean carburetor per engine manufacturer's recommendations.

WIRING DIAGRAM

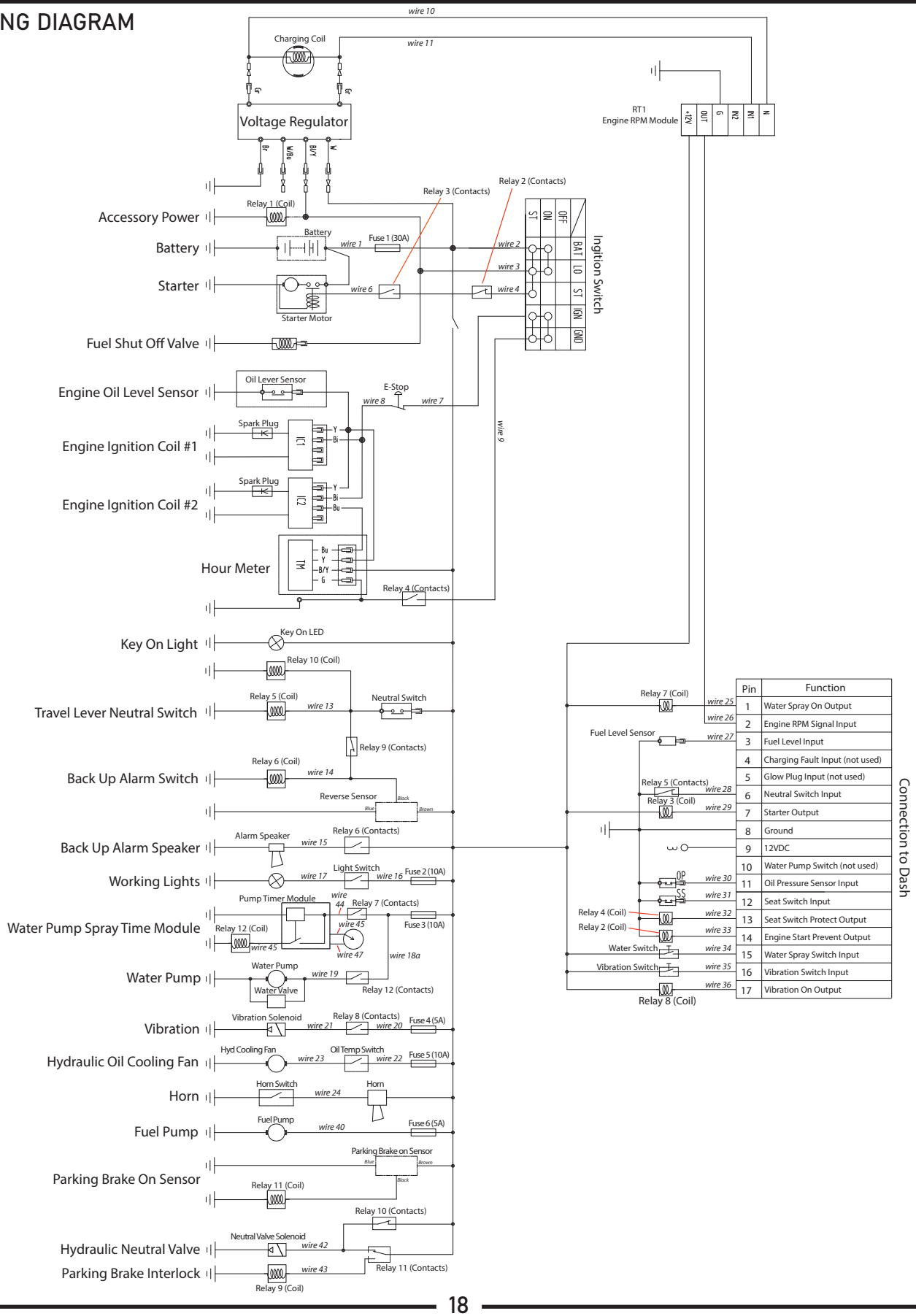

Pin	Function
1	Water Spray On Output
2	Engine RPM Signal Input
3	Fuel Level Input
4	Charging Fault Input (not used)
5	Glow Plug Input (not used)
6	Neutral Switch Input
7	Starter Output
8	Ground
9	12VDC
10	Water Pump Switch (not used)
11	Oil Pressure Sensor Input
12	Seat Switch Input
13	Seat Switch Protect Output
14	Engine Start Prevent Output
15	Water Spray Switch Input
16	Vibration Switch Input
17	Vibration On Output

HYDRAULIC DIAGRAM

3CE RA12H Hydraulic Schematic

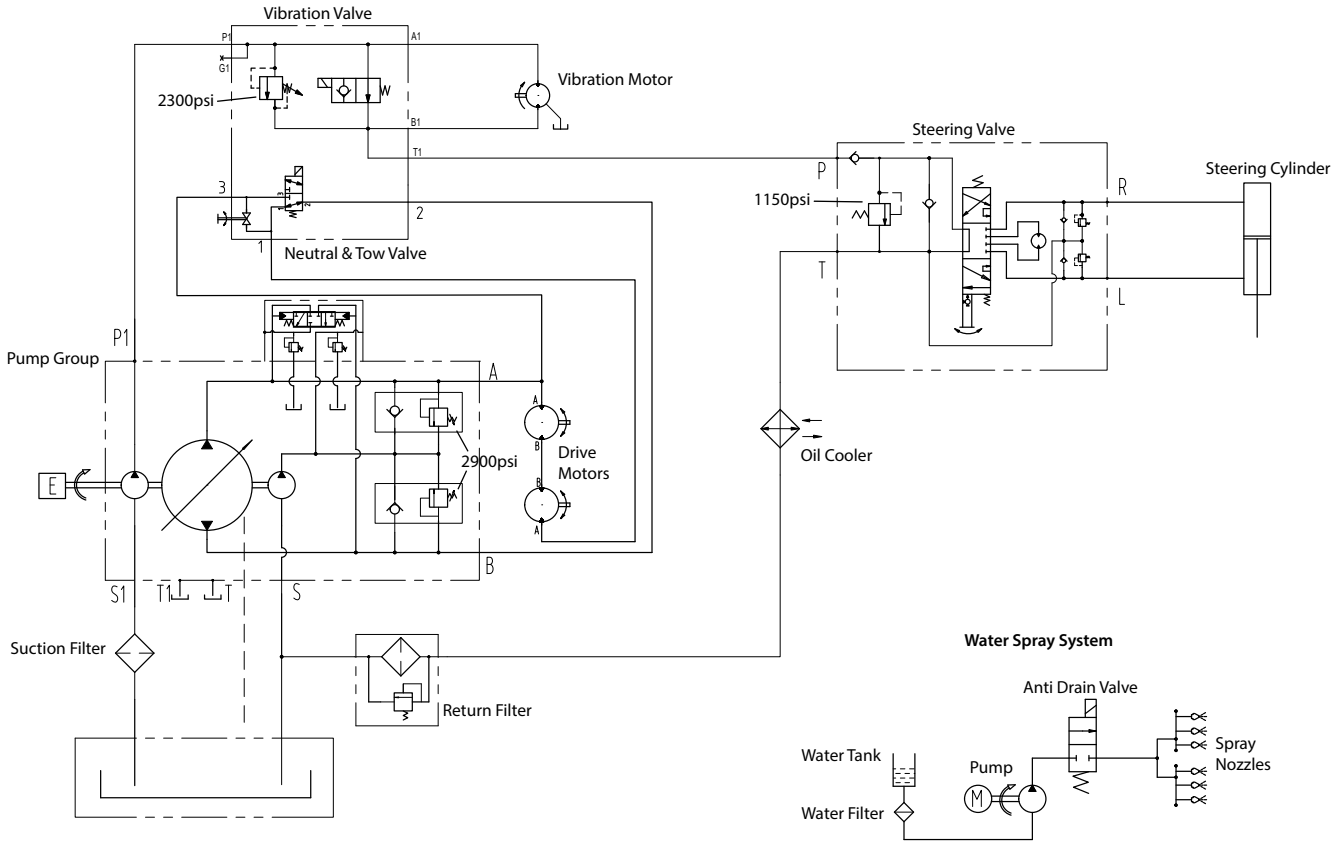

WARRANTY

Third Coast Equipment stands behind all of its products with a best in class warranty, including:

- Five-year warranty on spare parts
- Four-year warranty on Vanguard engines
- Three-year warranty on Honda engines
- Two-year warranty on labor

This limited warranty contains certain exclusions and limitations and is restricted to repair or replacement of the machine or affected parts only. Other exclusions may apply.

To view the full Third Coast Equipment warranty policy, visit:
HTTPS://THIRDCOASTEQUIPMENT.COM/WARRANTY-POLICY

THIRD COAST EQUIPMENT

3CE Dealer Card

THIRD COAST EQUIPMENT, INC.
NEW BERLIN, WI
THIRDCOASTEQUIPMENT.COM

RA12-0M-02