RA12-36



.

Third Coast Equipment, Inc.
17755 West Liberty Ln.
New Berlin, WI 53146

RA12-36 Technical Specifications

Weight	**RA12**
Operating Weight	3058 lb
Performance Data	
Drum Thickness	0.43 in
Vibration Frequency	3900 vpm
Centrifugal Force (front drum)	3821 lbf
Travel Speed with Vibration	5 mph
Gradeability with Vibration	30%
Water Tank Capacity	32 gal
Engine	
Engine Manufacturer	Honda
Engine Model	GX630
Cooling	air -cooled
Number of Cylinders	2
Output Power	20.8 HP
Operating Speed	3200 rpm
Fuel Tank Capacity	7.4 gal

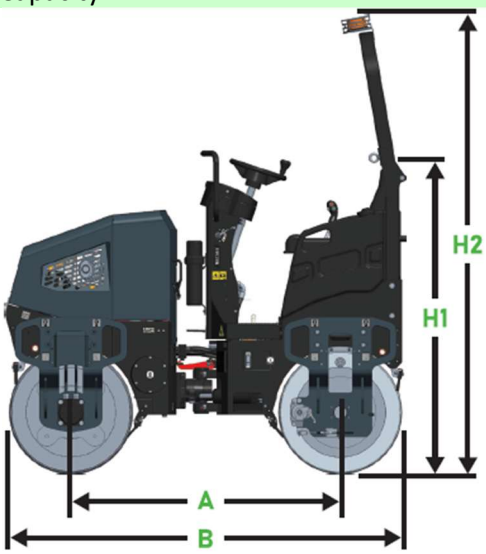



Dimensions		
Wheelbase	A	53.2 in
Overall Length	B	79.3 in
Drum Diameter	C	24.4 in
Drum Width	D	35.4 in
Overall Width	E	40 in
Height – Folded ROPS	H1	64.6 in
Height- ROPS Up	H2	94 in

Standard Equipment

- Hydrostatic drive & vibration
- Hydrostatic articulated steering
- Oscillating articulation joint
- Pressurized water system
- Folding ROPS
- Back-up alarm
- Strobe beacon
- Work lights front & rear
- Parking brake
- Seat belt
- Hour meter
- Fuel gauge

Specifications are subject to change without notice. The general information above is supplied without liability Rev 072726