THIRD COAST EQUIPMENT

RA29 / RA45



.

Third Coast Equipment, Inc.
17755 West Liberty Ln.
New Berlin, WI 53146

Technical Specifications

Performance Data	RA29	RA45
Operating Weight	6646 lb	9713 lb
Drum Thickness	0.46 in	0.79 in
Vibration Frequency	3600 vpm	3600 vpm
Centrifugal Force (front drum)	8542 lbf	10,116 lbf
Travel Speed with Vibration	7.5 mph	7.5 mph
Gradeability Max	40%	40%
Water Tank Capacity	52.9 gal	92.1 gal

Engine		
Engine Manufacturer	Yanmar	Yanmar
Engine Model	3TNV86	4TNV88
Cooling	liquid-cooled	liquid-cooled
Number of Cylinders	3	4
Output Power	43.5 HP	46 HP
Operating Speed	3000 rpm	2900 rpm
Fuel Tank Capacity	7.9 gal	19.2 gal

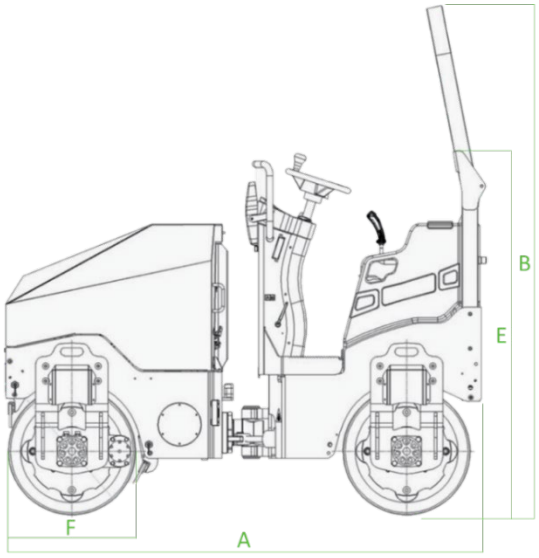

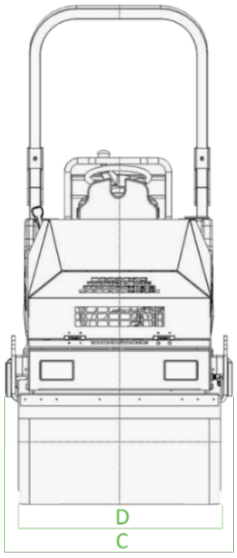

Dimensions			
Overall Length	A	94.9 in	110.2 in
Overall Height	B	104 in	114.2 in
Overall Width	C	52.1 in	59.8 in
Drum Width	D	47.2 in	55.1 in
Height ROPS Folded	E	67.8 in	81.9 in
Drum Diameter	F	27.2 in	35.4 in

Standard Equipment

- Hydrostatic drive
- Oscillating articulation joint
- Pressurized water system
- Dual multi-function travel levers
- Selectable front & rear vibration
- Folding ROPS
- Back-up alarm
- LED Strobe beacon
- LED Work lights
- Parking brake
- 3” Seat belt
- Anti-vandalism console
- Comfort Awning Kit
- 4-Way sliding Seat *(RA45)*
- 12V Power Receptacle *(RA45)*

Optional Equipment

- Hydraulic cutting edge with pressurized water
- Mirror Kit